Diagnostics

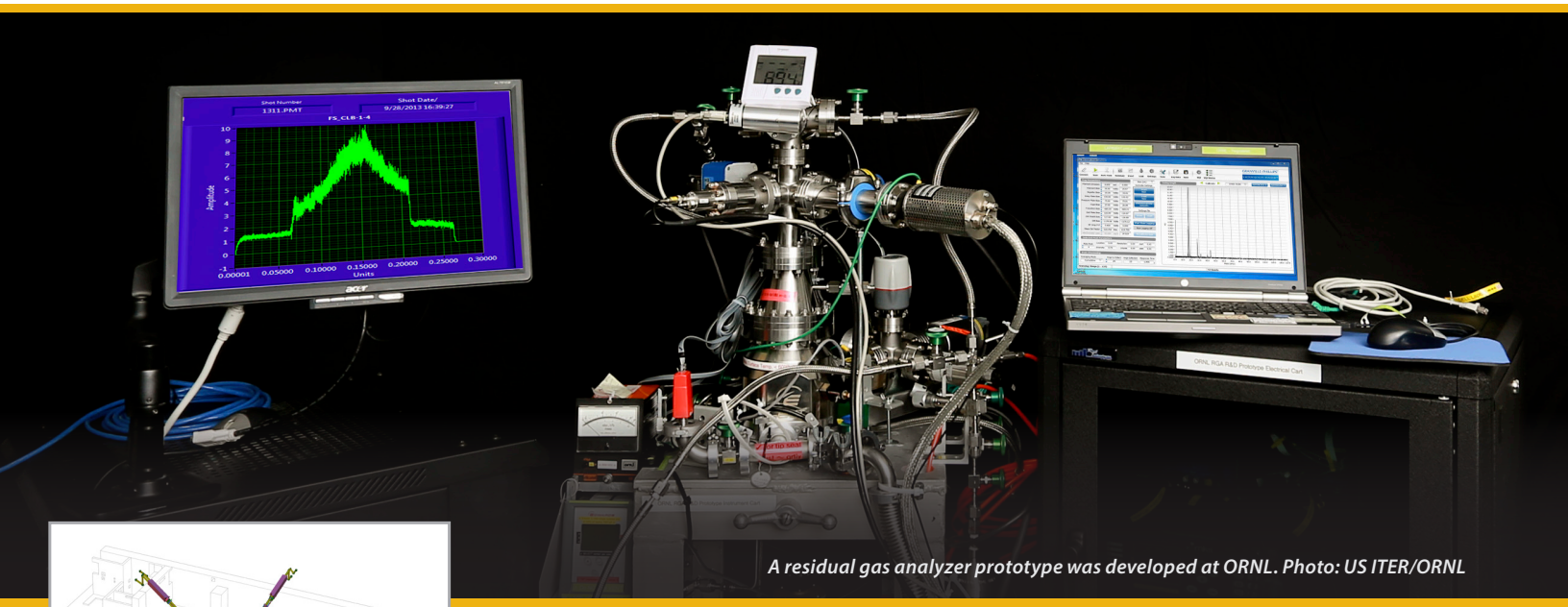

A residual gas analyzer prototype was developed at ORNL. Photo: US ITER/ORNL

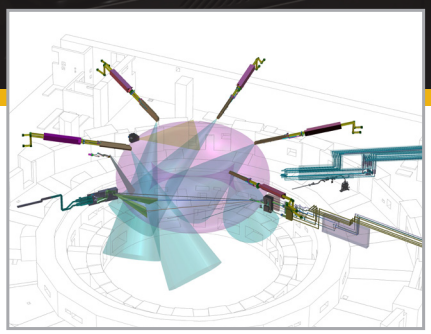

US diagnostic systems. Image: US ITER

US Contribution

US ITER is responsible for the research and development, design, and fabrication for 14% of ITER's port-based diagnostic systems, including integration of four diagnostic port plugs, plus seven instrumentation systems out of a total of approximately 45 individual diagnostic systems. The European Union, Japan, the Russian Federation, China, Korea, and India are also contributing diagnostics to ITER.

Overview

ITER diagnostic systems provide measurements to aid understanding of plasma behavior and optimize fusion performance. Because of the harsh environment inside the tokamak vacuum vessel, these systems must cope with a range of conditions not previously encountered by diagnostic technology, all while performing with high reliability. Diagnostics provided by US ITER will include microwave, laser, x-ray, and optical systems. US ITER also will design, fabricate, assemble, and test US-provided port plugs, specifically the upper ports (U11, U14), and equatorial ports (E3, E9). In addition, US ITER will support the integration of multiple diagnostics into these plugs, including some from other domestic agencies.

US ITER also is responsible for the following instrumentation systems: core X-ray crystal spectrometer, electron cyclotron emission radiometer, low field side reflectometer, motional stark effect, diagnostic residual gas analyzer, toroidal interferometer/polarimeter, and upper infrared/visible cameras.

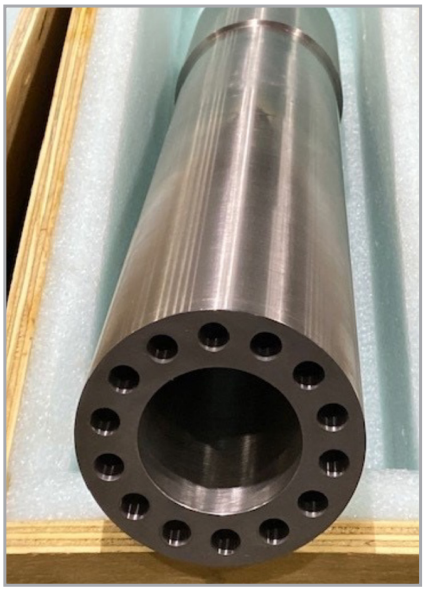

LFSR prototype antenna showing coolant passages surrounding the microwave transmission channel. Photo: GA

Status

The low field side reflectometer, which has components that are part of the assembly of a first plasma port plug, is in manufacturing development. Captive overhead supports for both the low field side reflectometer and toroidal interferometer/polarimeter were fabricated and shipped to the ITER Organization in August 2022.

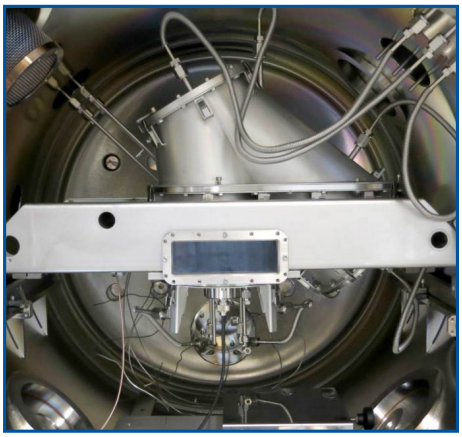

Vacuum test chamber for mirror cleaning in support of the visible infra-red wide angle viewing system. Photo: US ITER

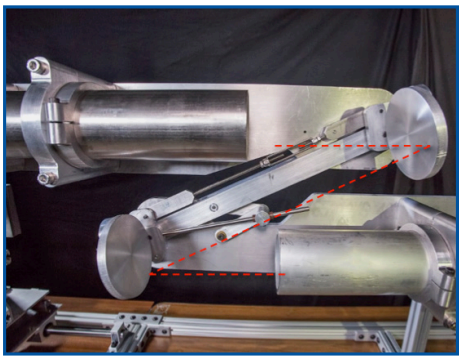

A gaussian telescope maintains alignment during thermal expansion. Photo: GA

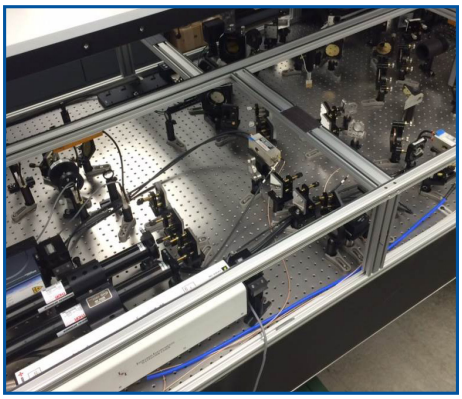

Toroidal interferometer/polarimeter prototype optical table. Photo: GA

Technical Description

Core X-ray crystal spectrometer. Measures the temperature of the ions from the hot plasma core to the cooler plasma edge.

Diagnostic residual gas analyzer. Measures the composition of exhaust gases leaving the tokamak in the edge and divertor regions, including helium and other constituents.

Electron cyclotron emission radiometer. Measures the temperature of the electrons from the core to the edge.

Low field side reflectometer. Measures the electron density in the outer layers of the plasma by probing the plasma with microwave beams and detecting the reflected wave.

Motional stark effect. Measures the plasma current density, providing data that are important for understanding conditions for plasma stability.

Port integration. Integrates 17 tenant diagnostics into four US-supplied port plugs (two upper ports and two equatorial ports).

Toroidal interferometer/polarimeter. Measures the electron density profile by probing the plasma with laser beams, providing data that will be used to control the density in real time.

Upper infrared/visible cameras. Image the high heat flux surfaces in the vacuum vessel using sophisticated camera systems to check for hot spots and particle emissions.

Ruben Fair
US ITER Project Office
Diagnostics Team Leader

Princeton Plasma Physics Laboratory
rfair@pppl.gov

Tripp Fulmer
US ITER Project Office
Port Integration Team Leader

Oak Ridge National Laboratory
fulmerjl@ornl.gov

Dave Rasmussen
US ITER Project Office
Residual Gas Analyzer Team Leader

Oak Ridge National Laboratory
rasmussenda@ornl.gov

Port Integration

Port openings at ITER. Image: ITER Organization

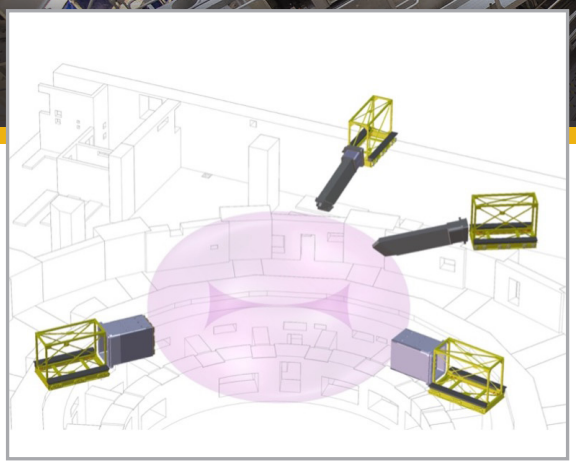

Upper port 11, upper port 14, equatorial port 3 and equatorial port 9 are in US ITER scope. Image: US ITER

US Contribution

US ITER will provide design, fabrication, assembly, and testing of four port plugs, specifically the upper ports (U11, U14), and equatorial ports (E3, E9), as well as support for the integration of 17 tenant diagnostics into these ports.

Overview

Port integration for four port plugs requires integration of the associated tenant diagnostic and functional systems that will be installed near the tokamak. These ports will house diagnostics delivered by US ITER as well systems delivered by the ITER Organization, the European Union, India, Japan, Korea, and Russia. The scope includes design of the port plug, interspace support structure and port cell support structure, which are in parallel with tenants and are followed by analysis to validate the design.

The port plugs will be fabricated by the ITER Organization with a common design and then delivered to each port integrator. US ITER will receive port plug structures in a specialized facility capable of handling large loads. Tenant components will be delivered to the same facility for assembly into the diagnostic shielding modules. After assembly and functional testing in a clean work area, neutronic shielding will be added for the diagnostic shield modules. Up to 36,000 shielding blocks are needed per port. Fully assembled, each port will weigh up to forty-eight metric tonnes.

In addition, each port will have two structures that will house diagnostic and system support equipment and cabling outside of vacuum confinement (ex-vessel: the interspace support structures and the port cell support structures). Both structures will be placed on a rail system for removal during maintenance via a cask system.

Status

US ITER's port integration scope is now in preliminary design.

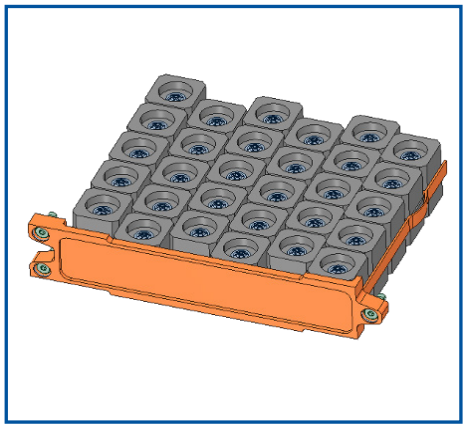

Approximately 36,000 diagnostic shielding blocks are part of each port. Image: US ITER

Technical Description

Upper Port Plug:
Total mass up to 25 t

Equatorial Port Plug:
Total mass up to 48 t

Interspace Support Structure:
Weighs up to 70 t
6,000 mm x 2,296 mm

Port Cell Support Structure:
Weighs ~55 t
8,000 mm x 2,296 mm

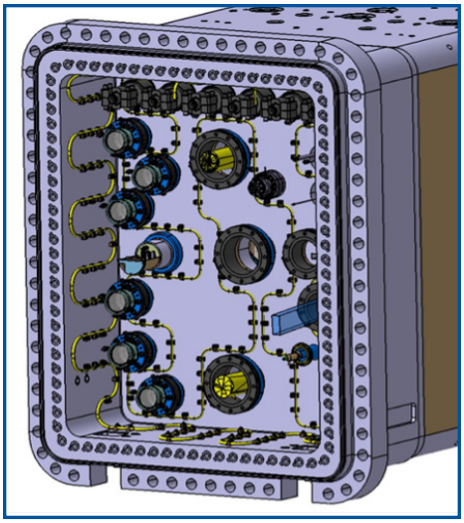

Closure plate of equatorial port plug with vacuum-confined feed through connections. Image: US ITER

Technical Description

Upper Port 11:
Neutron Activation System (ITER Korea)
Micro Fission Chamber (ITER Japan)
Upper Wide Angle Viewing System (US ITER)

Upper Port 14:
Glow Discharge (ITER Organization)
Disruption Mitigation System (ITER Organization)
Upper Wide Angle Viewing System (US ITER)
Port Plug Mechanical Instrumentation (ITER Organization)

Equatorial Port 3:
Glow Discharge (ITER Organization)
Motional Stark Effect (US ITER)
Core Imaging X-Ray Spectrometer (ITER Russia)
Core Imaging X-Ray Spectrometer (ITER Russia)
Toroidal Interferometer Polarimeter (US ITER)
Wide Angle Viewing System (EU Fusion for Energy)
Diploidal Interferometer Polarimeter (ITER Organization)

Upper Port 9:
Wide Angle Viewing System (EU Fusion for Energy)
Electron Cyclotron Emission (US ITER)
Electron Cyclotron Emission (ITER India)
Toroidal Interferometer Polarimeter (US ITER)

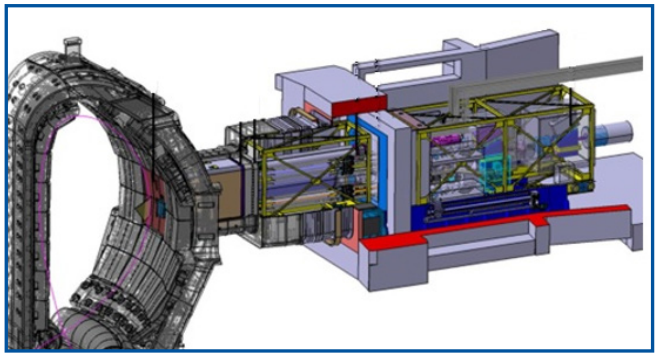

Each port plug is inserted into the assigned tokamak port; to the right is the port interspace and port cell. Image: US ITER

Tripp Fulmer
US ITER Project Office
Port Integration Team Leader

Oak Ridge National Laboratory
fulmerjl@ornl.gov